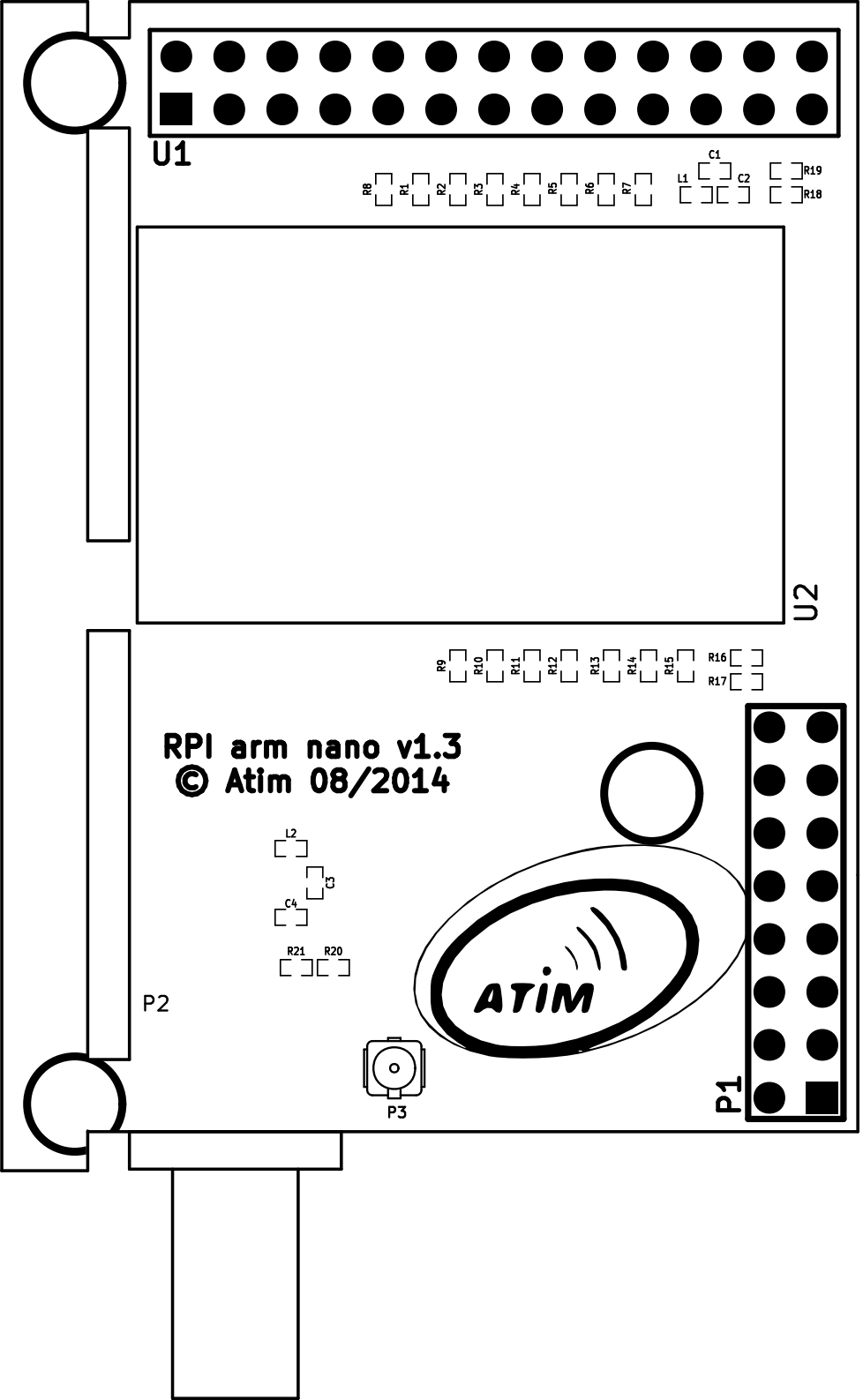
U1
C1
R8
R1
R2
R3
R4
R5
R6
R7
L1
C2
R19
R18
U2
R9
R10
R11
R12
R13
R14
R15
R16
R17
RPI arm nano v1.3
© Atim 08/2014
L2
C3
C4
R21
R20
P2
ATIM
P3
P1

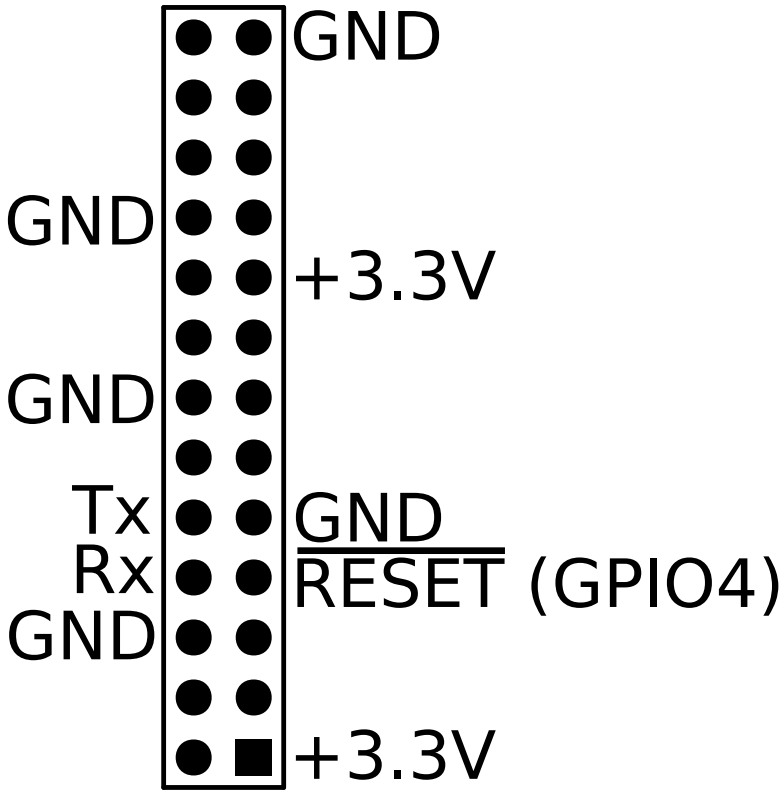
GND
GND
+3.3V
GND
Tx
GND
Rx
RESET (GPIO4)
GND
+3.3V